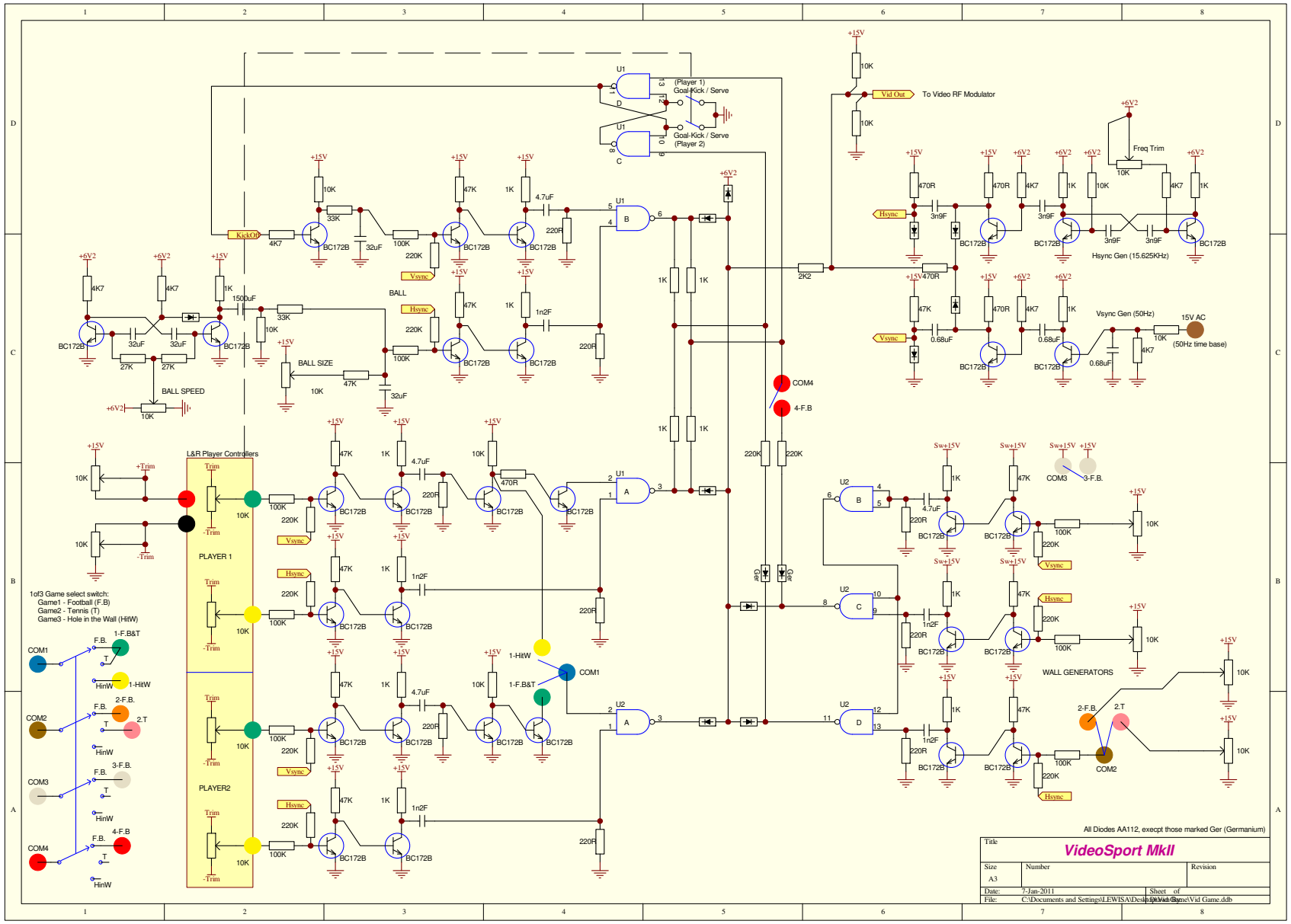
(Player 1)
Goal-Kick / Serve
Goal-Kick / Serve
(Player 2)
Vid Out
To Video RF Modulator
Freq Trim
Hsync Gen (15.625KHz)
Vsync Gen (50Hz)
15V AC
(50Hz time base)
BALL
BALL SIZE
BALL SPEED
L&R Player Controllers
PLAYER 1
PLAYER2
1of3 Game select switch:
Game1 - Football (F.B)
Game2 - Tennis (T)
Game3 - Hole in the Wall (HitW)
WALL GENERATORS
All Diodes AA112, execpt those marked Ger (Germanium)
Title
VideoSport MkII
Size
A3
Number
Revision
Date: 7-Jan-2011
Sheet of
File: C:\Documents and Settings\LEWISA\Desktop\Video Game\Vid Game.ddb
Drawn by: